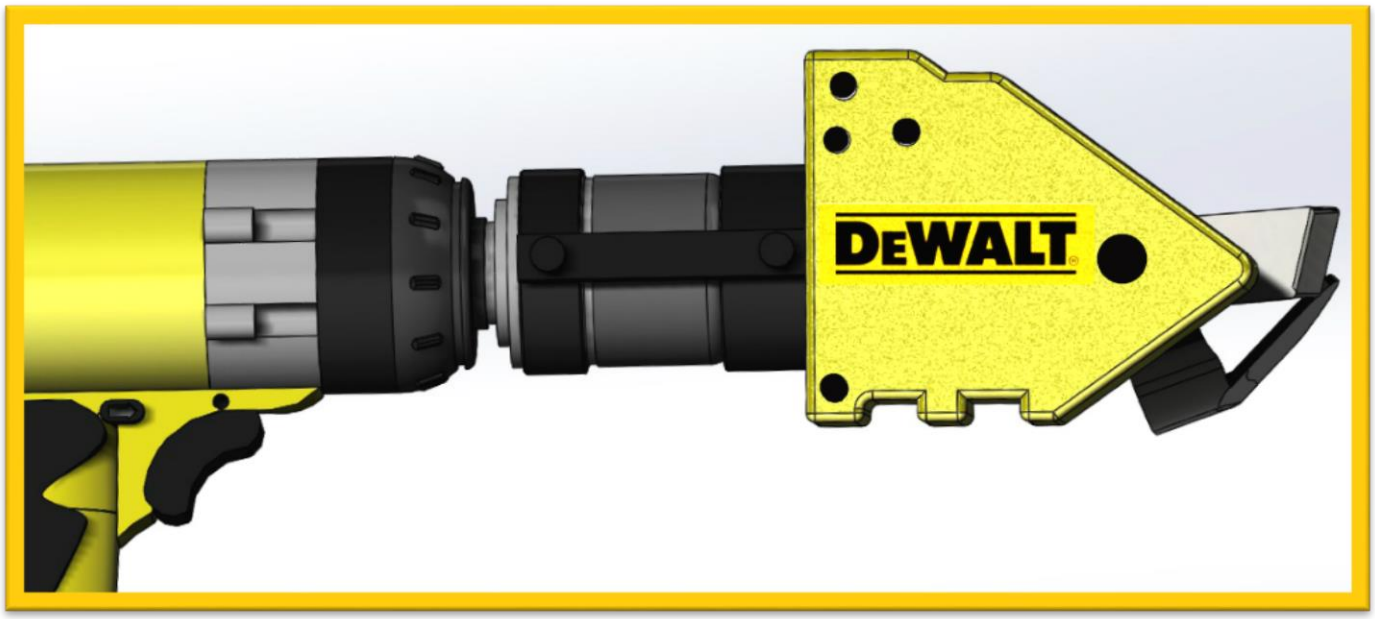

2016 POWER-METAL SHEAR

DC 988 SHEAR ATTACHEMENT

Unit: Design Engineering Projects 2
BSc Design Engineering
Level: 5
Student: i7437036

TABLE OF CONTENTS

Contents

De Walt ____ 1
PDS ____ 7
Concept Development ____ 8
Attachment Technical Analysis ____ 12
Assembly Instructions ____ 13
References ____ 14
Appendix ____ 16

TABLE OF CONTENTS

Figures

FIGURE 1. DC 988 CORDLESS - HAMMER DRILL. 1

FIGURE 2. DC 988 SOLIDWORKS MODEL WITH POSSIBLE ATTACHMENT. 3

FIGURE 3. INCREASED GLOBAL-INTEREST ON DRILL ATTACHMENT. 4

FIGURE 4. RADICAL INTEREST-INCREASE ON DE WALT DRILL TOPICS.

FIGURE 5. MALCO'S TURBO-SHEAR-DRILL ATTACHMENT. 5

FIGURE 6. DE WALT'S EXISTING SHEAR ATTACHMENT. 6

FIGURE 7. PRODUCT DESIGN SPECIFICATION FOR NEW ACCESSORY. 7

FIGURE 8. POWER DRILL TO POWER SHEAR SYSTEM CHANGE. 8

FIGURE 9. METAL-SHEAR- BLADE VARIETY ANALYSIS.

FIGURE 10. ATTACHMENT-TO-DRILL DEVELOPMENT. 9

FIGURE 11. CLAMP DESIGN: PRO-CON LISTS.

FIGURE 12. ATTACHMENT HOUSING. 10

FIGURE 13. PRODUCT PRICING STRATEGY.

TABLE OF CONTENTS

Tables

TABLE 1. DC 988 TECHNICAL DATA 1

De Walt

DC 988

To follow the footsteps of Raymond E. De Walt, Power Tool manufacturer, De Walt, engineered the DC 988 Combi Drill to meet the needs of its customers at that specific time: To drill a range of materials using a three-speed transmission. As years have passed, its customer's range has expanded, leading to a wider range of needs expected to be met. The DC 988 drill is still in use by various satisfied customers, which proves this tool to be the "general-purpose workhorse" it's advertised as. (SKJ, 2005) Raymond E. De Walt's main goal was to simply create high-labor-cost work without increasing the headcount. (De Walt, 2016) The production of Power Tools met, and still meets, his goal.

Figure 1. DC 988 cordless - hammer drill.

Power	450 watts
Max. Torque	52
Weight	≈ 2kg
RPM	G1 = 450 G2 = 1450 G3 = 2000
Torque (N/m)	G1 ≈ 9.5 G2 ≈ 2.96 G3 ≈ 2.15
Ah	3 amp/ hr.
Voltage	18 V

Table 1. DC 988 Technical Data

De Walt is currently seeking to expand its range of accessories for their Combi Drills, specifically their DC 988 model. Adding an accessory to such a system could only result in a change of functionality. Changing the functionality in the drill's system would mean to develop from the existing system, rather than creating an entirely new one. For this reason it is referred to as a "new" rather than "innovative" range of accessories. As seen in Table 1 above, this product has got a range of specifications and technical data that must be taken into great consideration through the development of possible accessory- range. The

calculations made can be found in the Appendix section. The possible new-accessory specifications, as well as technical data, has been based around all of the DC 988 given information.

NEEDS ANALYSIS

Nowadays De Walt is a global partner for commercial contractors and installer groups, (De Walt, 2016) where the power-tool manufacturer has been maintaining its dominance in the market by speaking face-to-face with professionals and users in general. This dominant reputation they currently hold has a great impact on their products. Since they are known globally and have an extended end of connections, they are expected to *effectively* meet their corresponding customer's needs. This is done by developing and evolving from customer's feedback. The objective is always to "come up with tools that will exceed customer's expectations," as they openly advertise on their web page. To gain the reputation they currently hold was done by going as close to the extremes as possible. When in doubt their customers are able to see the range of extreme testing to prove the point that "De Walt doesn't make mistakes".

On two-thousand and seven, De Walt took up the challenge of creating the most comprehensive system, in the world, for tools dedicated purely to safety. (De Walt, 2016) From CTC (Complete Torque Control) to AVC (Active Vibration Control), the power-tool manufacturer is constantly engineering excellence dedicated to safety so its customer's needs can be met. It is included in their safety guidelines, found in their user manuals that the construction-power-tool users are given the protection and training needed strictly before initiating usage.

The metal cutting machines have been one of De Walt's main-focus areas for forty-five years now, but it wasn't until twenty-four years ago that they started developing the portable-electric-power tools. De Walt has currently got two products based around metal-cutting; one is an attachment, and the other an individual tool. This is a very low number of products for such company. Although De Walt started and developed from woodworking, it is expected to have a more balanced variety in their products now that they cover different construction applications. The more variety in constructions applications, the wider their customer variety is. This isn't a new concept for De Walt, yet their metal-cutting products range is extremely small compared to the rest of their product areas. For this reason, creating an attachment within this aspect of construction-working is a necessity.

Figure 2. On the left: DC 988, on the right: DC 988 SolidWorks model with possible attachment.

Regarding their technicality, their products are safe and effective. Regarding their appearance, they are produced to follow specific design cues. Such brand-design cues can clearly be seen in Figure 2 above. A specific yellow-black balance must be met following the patterns used in the DC 988 drill. The drill's equilibrium should not be affected. The contact areas must be precisely defined to create the clamping, or locking collar feature. It is specified for the new attachment to grip the handle collar behind the existing chuck. For this project, as seen on the right of Figure 2, a Power-Metal-Shear attachment has been chosen for the production of De Walt's new range of accessories. This project was driven by a specific and clear project plan, which can be found in the Appendix of this report.

MARKET RESEARCH

De Walt is currently being controlled by its parent-company, Stanley Black and Decker. (Stanley Black & Decker, 2016) By being part of this corporate group, the parent-company depends on some De Walt's range of tools and for this they invest on their corresponding active-global production. Despite De Walt being a subsidiary company, Stanley Black and Decker still gives it a great deal of autonomy when it comes to their designs, both aesthetical and technical.

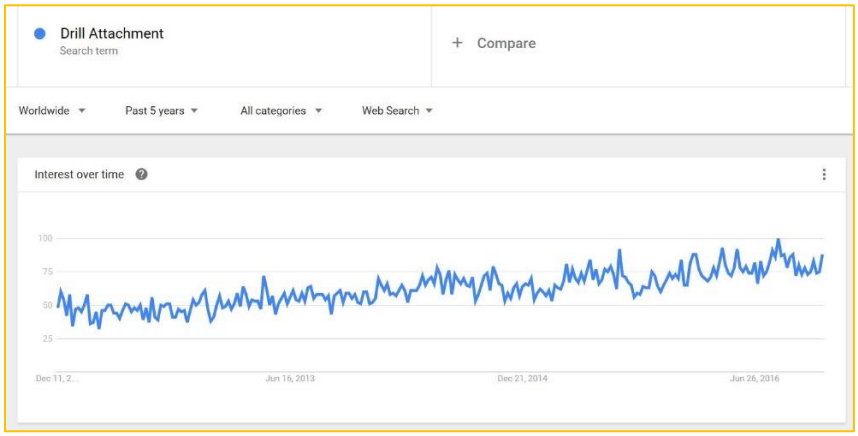

Figure 3. Increased global-interest on Drill Attachment over the last five years. (Google Trends)

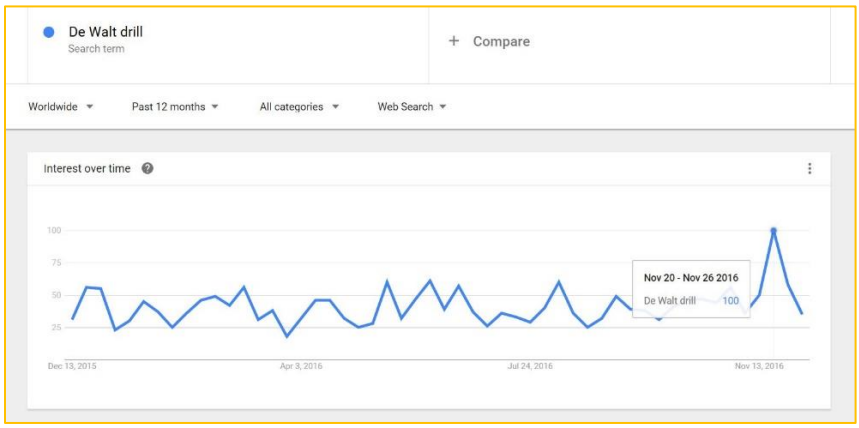

Figure 4. Radical interest-increase on De Walt drill topics in the last twelve months (Google Trends)

The amount of interest on construction-drills has been steadily increasing during the last five years, as shown in Figure 3. And along with that data, it can be seen from Figure 4, which in the last year the interest on De Walt drills, specifically, has been maintained. This means its market position and reputation has also been maintained. From these Google Trends analysis it can be predicted that De Walt power tools and their attachments will keep provoking interest on their users for the next few years. Even more so, if De Walt expand on the range of products and their areas of construction- usage. The interest can be correlated to their sales. From this it can also be estimated for the power-tool manufacturer company to go steady, or rise, on its sales.

COMPETITIVE PRODUCT ANALYSIS

Similarly to any other company, De Walt has got competition. There are several companies that provide tools such as those manufactured by De Walt: Wolfcraft, Makita, Milwaukee, Malco Products, and many more. Each of these individual companies follow their corresponding design cues, thereby creating their competitive advantage. Every company features a different "threat" for De Walt's business. As analyzed from Porter's Five Competitive Forces, the main threats to be considered are: Supplier and buyer power, degree of rivalry, and threat of substitute. (UK Essays, 2013) Makita is rising with its AVT (Anti-Vibration Technology) within its new generation of machines. (Makita UK, 2016) Malco Products has been known for its drill attachments with their collar extension that locks over *most* power drill's bodies, it shows equal competitive advantage against De Walt, when considering their metal-shear tools. Both Malco Products and De Walt have currently got two products of the kind. (Malco, 2016)

Another relevant company that constantly shows potential-competitive forces against De Walt *is* itself. As a company that follows such an active production cycle, and meets an extensive amount and diversity of needs, this power tool manufacturer sets high expectations for itself. Every new generation of products must be greater than the last one. This is simply so because its customer's expect so. For this reason customer's expectations; should be fulfilled and overachieved every time a new range of products is out in the market.

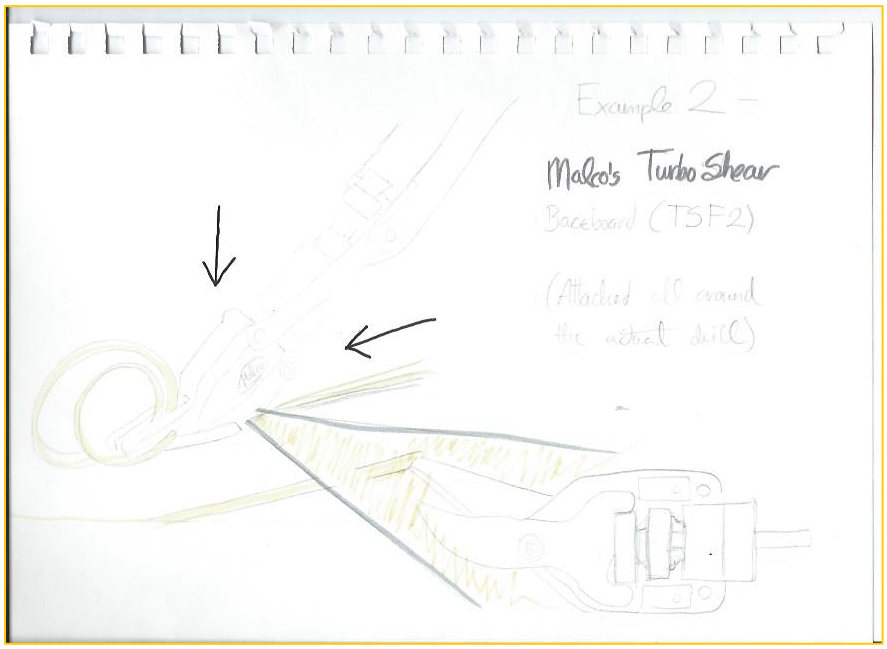

Figure 5. Malco's Turbo-Shear-drill attachment.

Figure 6. De Walt's existing shear attachment. (De Walt, 2015)

The Malco TurboShear Backboard (TSF2) drill attachment is considered to be one of the main competitive products since its functionality aims at meeting the same needs. The specifications are different: The clamping device is locked around the entire drill body. This produces a visual impression, which leads to the interpretation that if the clamp were to be shorter, the attachment's systems would not be able to be supported. One of the obvious *cons* is that it requires more material than the new De Walt accessory, because it owns a lower safety degree. As shown in Figure 5, its system is similar to that used in the new attachment. By taking a quick look at the blade design it can be stated that this attachment is less reliable than that of the new proposed De Walt one. The fact that this design doesn't involve an offset aspect to it means that it is going to be more difficult to: Initiate a cut, cut through abnormal thicknesses, cut through spiral ducts, etc. As show in the blade analysis in the Appendix, the offset-blade design is *the* optimum option.

De Walt's current 2015-shear-attachment is *already* better than the Malco Product's attachment. This shear, besides sheet metal and corrugated sheet metal, can cut ducting, asphalt shingles, steel mesh, vinyl siding, wire, plastic materials, cardboard, and rubber. Compared to Malco's blade design, this one allows for less distortion. It is known that some customers have complained about it still being difficult to initiate a cut, for this reason, customers have had to set a very clear starting point before beginning to cut the material. (Fred, 2015) Aside from all that, this current clamp design doesn't follow the new range of accessories' specification. Given the amount of *pros and cons* present, the possibility for improvement are vast.

PDS

Performance:

The improved De Walt's-Power-Metal-Shear-2016 attachment has been design to be suitable for cutting a wide range of materials(i.e. ducting, asphalt shingles, steel mesh, vinyl siding, wire, plastic materials, cardboard, and rubber), especially metals. The newly-designed HCHC steel blades have been modified for easier cutting-initiation using a similar system to that of the 2015 shear. This product is a great addition to any 18 V cordless drill, but has followed the exact specifications for the De Walt's DC 988 drill. This serves purpose for the entirely-new plastic-composite clamp, which grips and locks around the drill's collar, after inserting the attachment's shaft in inside it.

PRODUCT DESIGN SPECIFICATION

Min. Cutting Radius	25 mm
Capacity (steel)	15 GA (15 x 10^9 Amps)
Mass	700 g max.
Length	140 mm
Max. Gauge	20
Strokes Per Minute	0 – 2,400
Blades Material	HCHC Steel
Housing/ Clamp Material	Ultradur B4300 G6 PBT
Product Class	III (18 V max.)
Shaft Diameter (Shaft-to chuck)	11-12.9 mm
Clamp Diameter (Clamp-to collar)	43 mm
Brand	De WALT
Maintenance	Replaceable HCHC Steel-Blades
Product life	2 years
Cost	£20
Maximum Axial Force	5.4 kN
Maximum Torque	2.15 N/m
Swivel	360 with SlowMotion's stabilizing-technology
MTBF (Mean Time Before Failure)	Approximately 15 hours
Environment	Dry
Testing	Factory: 1 of 50
Documentation	Assembly instructions in User Manual.
Disposal	Recyclable
Safety	Follows DC 988 guidelines
Guarantee	1 year

WARNING: To reduce the risk of injury, read the instruction manual.

Figure 7. Product Design Specification for new accessory.

Concept Development

The main goal was to change the cordless DC 988 drill functionality. It has now gone from a power drill to a power shear. These two different functionalities, require a change in the drill's system. Although it is still utilizing its rotational aspect, the DC 988 drill was given an additional system to achieve the final 2016-shear attachment.

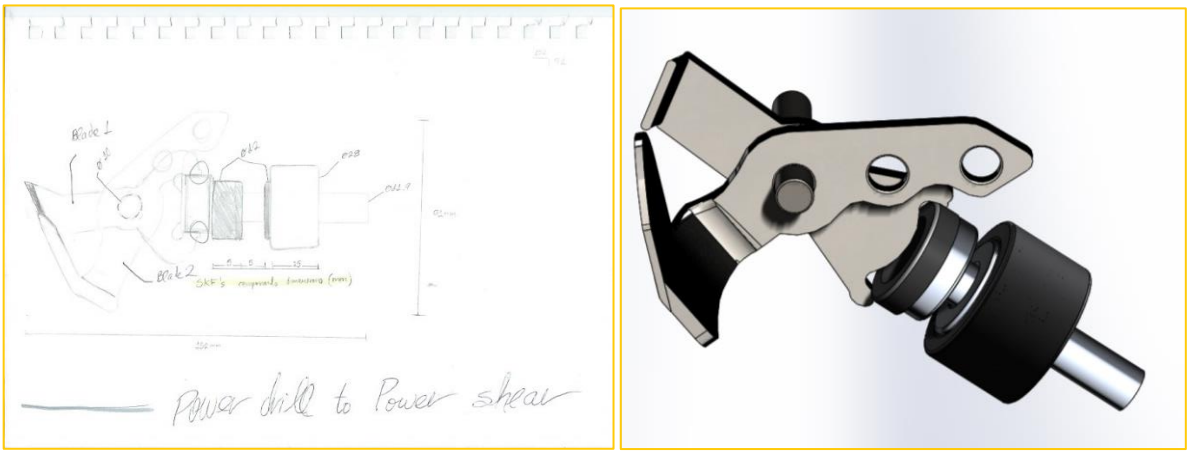

Figure 8. Power drill to Power shear system change (Sketch and SolidWorks model).

As shown above, from right-to-left, by inserting a shaft with a diameter of 12 mm into the chuck, which holds a capacity of 13 mm, the system changes. The way in which this shear system works is by using the third gear transmission system of 2000 rpm, as the input velocity. This makes the shaft rotate, and along with the shaft, two bearings and a bush. One of the bearings is located near the outer-end extension of the shaft. This bearing with an eccentric locking collar has been chosen specifically for this function, since its eccentric-locking collar permits the reciprocating force to take place. Blade 1 has been designed to precisely grip around this eccentric collar by increasing its contact-area. Blade 2 and Blade 1 make contact through a pivot, which has been designed to hold the calculated shear force.

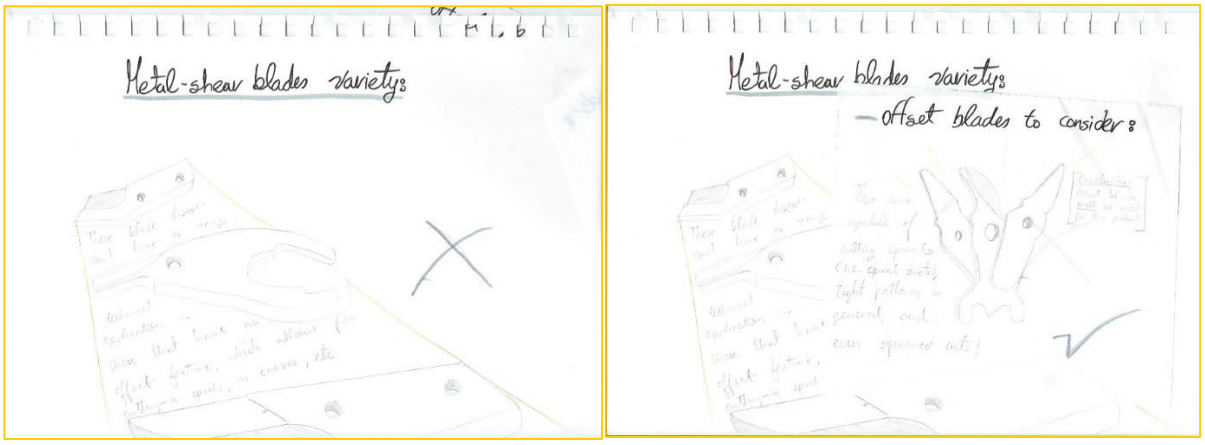

Figure 9. Metal-Shear- blade variety analysis.

Figure 9 shows the analysis done to get to the conclusion that the offset blades are the optimum option. It simply allows for less distortion. The SKF technology was used, since it focuses on greatly reducing environmental impact, (SKF, 2016) for both of the bearings and the filament-wound bush. Both blades are

made of High Carbon High Chromium (HCHC) Steel, which are to be manufactured using CNC machinery. (Mastercut, 2016)

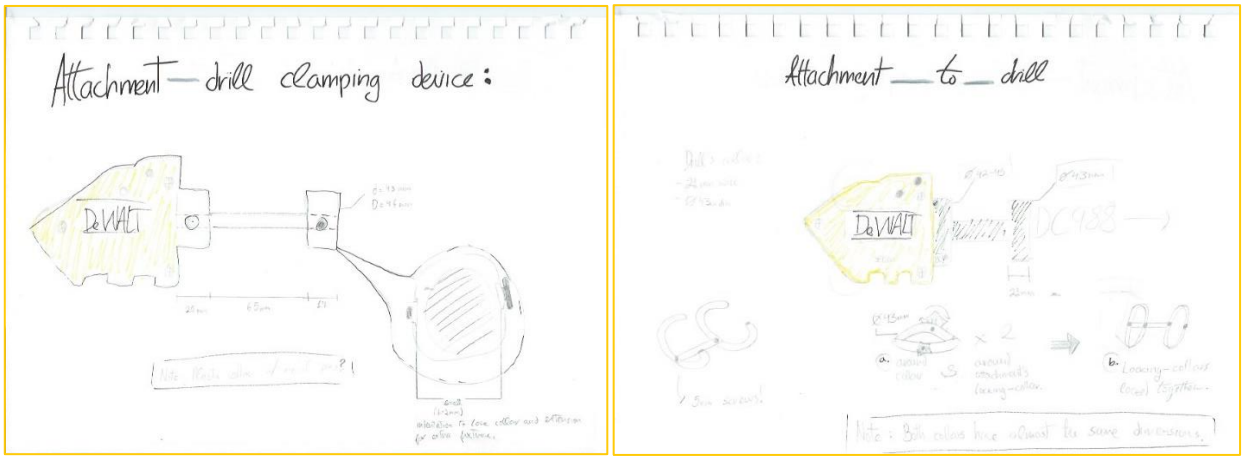

Figure 10. Attachment-to-drill development.

After analyzing the existing De Walt shear attachment, it was concluded that there must be a collar to grip on both extensions. Each collar is firstly locked in place by pressing against the collar extensions, the pins are then introduced, and, afterwards, the collars are locked in place with the screws.

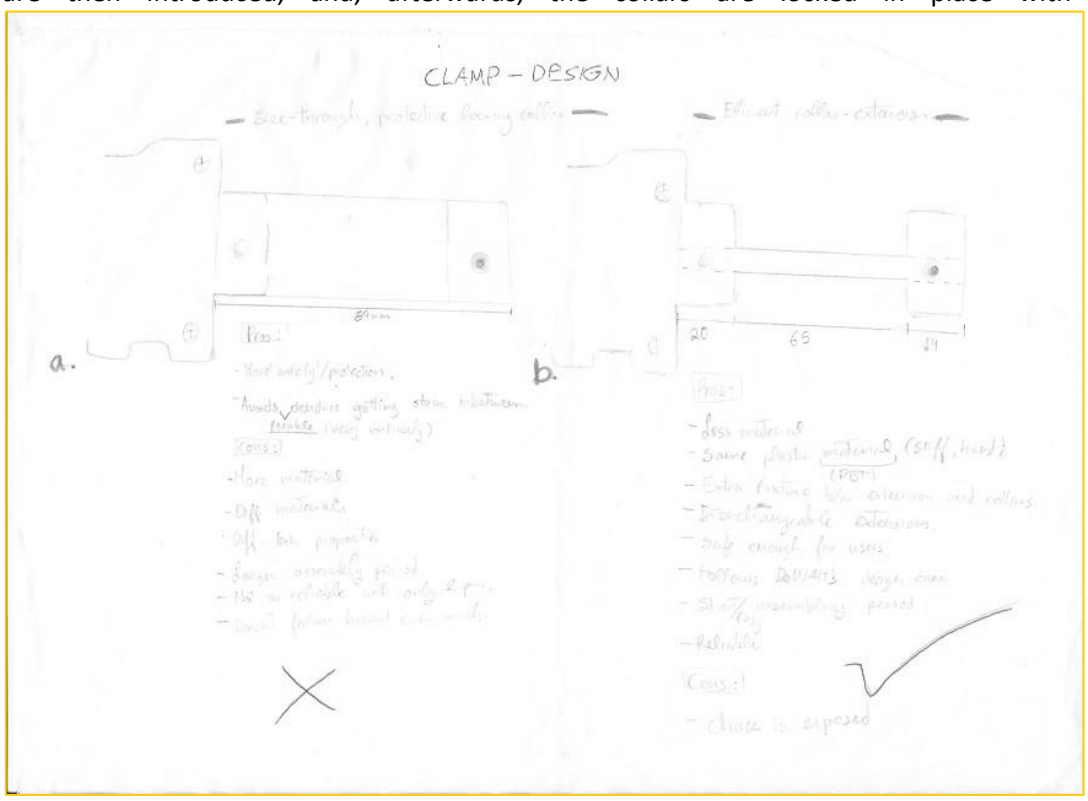

Figure 11. Clamp Design: Pro-con lists.

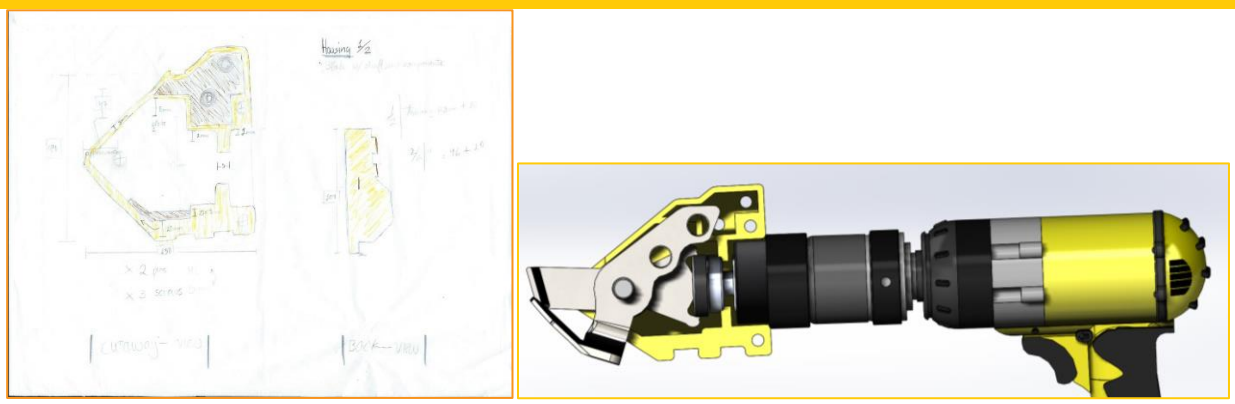

Figure 12. Attachment Housing (Sketch, SolidWorks model).

For the attachment's housing, the De Walt's design cues were analyzed, followed, and applied. It has a 10 mm separation between system and housing, its final shape was naturally developed by aiming to use the less material as possible. Its housing, as shown in Figure 12, is held together by three screws, and two black pressure pins. This falls within the screw-to-pin ratio used in De Walt products. The yellow housings with black pins and edges follows precisely the brand's design cues, causing the attachment to match the DC 988 drill, as well as any other De Walt drill.

The attachment's housing, as well as the DC 988 drill's housing used the same plastic-composite material: BASF's Ultradur B4300 G6 polybutylene terephthalate (PBT). (MPW Staff, 2010) These housings are to be manufactures by using the injection molding process. De Walt uses this material because the acoustic damping behaviour is superior to that of metal, and the injection mould lasts longer than the magnesium die-casting mould. Plastic allows for snap-on fastening, shortening assembly time. Even at high operating temperatures. BASF's PBT provides the requisite stiffness and dimensional stability, even in a humid environment. (BASF, 2001)

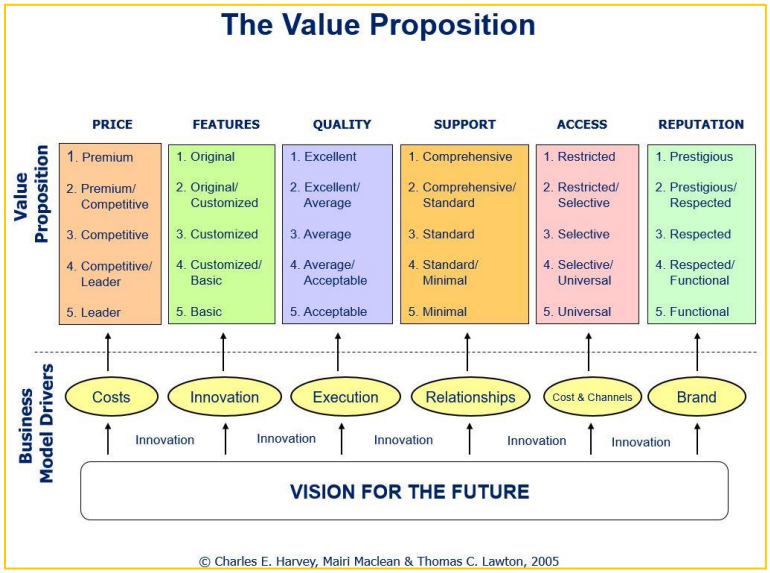

Figure 13. Product Pricing Strategy.

CONCEPT DEVELOPMENT

Using Harvey's, Maclean's, and Lawton's "Value Proposition" diagram, see above, it was decided that the final product falls within the number three categories. Where the price is competitive, the features are customized, the quality is aimed to be average or above, there's standard support, as well as selective access to it. When using this system for value proposition, the price sets the customers' expectations, and these must, *at the very least*, be met.

The chosen £20 price is an approximation, since its retail price can only be justified by using the formula: Retail Price = [(cost of item) ÷ (100 – mark up percentage)] × 100. (Khan, 2016) after having created a Bill of Materials for the finalized- product.

Attachment Technical Analysis

ENGINEERING ANALYSIS

Using 450 watts, and its third gear (2000 rpm), it was obtained a value of 2.15 N/m for the Torque. 2000 rpm means 33.3 rotations per second, which then defines the system to make one cut every 16.6 seconds.

Using the $E = F \times d$ formula, the axial force acting on the 65 mm shaft was calculated.

First the Energy was calculated by using $E = P \times t$, where t = 432 seconds → 7.2 min

From this, a **System's Operation Efficiency timeline** can be estimated:

ON **(0 min.)** Intermediate Efficiency **(4.8 min.)** Low Efficiency **(7.2 min.)** OFF**(7.5min)**

So, $E = 194 \times 10^3$ Joules

Then, the numbers were plugged into the $F = E / d$ equation (since energy is equal to the capacity to do work) to obtain:

$F = 2.99 \times 10^3$ N.

To calculate the reciprocating force acting on the bearing and its eccentric collar, where d = 7 mm, the same process and formulae was used to obtained that $F = 27.8 \times 10^3$ N.

For the shear force produced by the blades acting on the pivot, the formula for a Beam Fixed at Both Ends – Concentrated Load at Any Point was used using bending moments. (Mech. Design, 2016) The calculations can be found in the Appendix.
At the end the Shear force (Blade 1) = 55.6 N, and Shear force (Blade 2) = 84.4 N.
Resulting in a total Shear Force of 140 N acting on the pivot.

Assembly Instructions

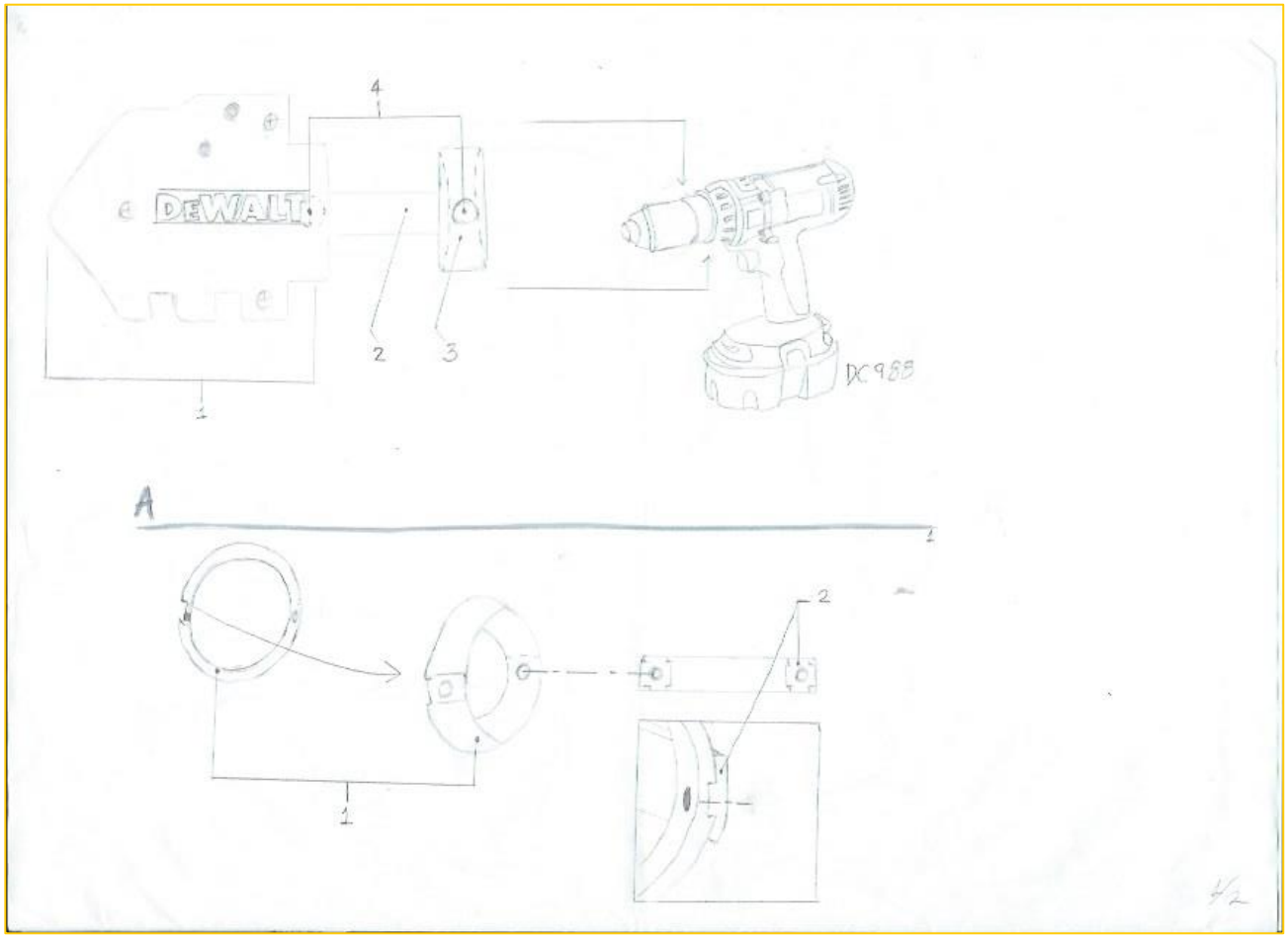

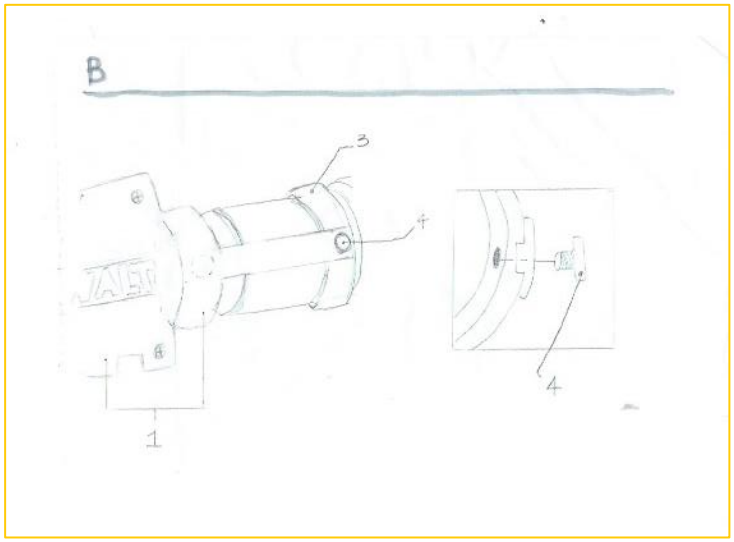

References

1. SKJ, 2005. Customer Review [online] At: https://www.amazon.com/DEWALT-DC988KA-18-Volt-Cordless-Hammerdrill/dp/B0002AJKOU/ref=sr_1_1?ie=UTF8&qid=1481247300&sr=8-1&keywords=dewalt+dc988
2. De Walt, 2016. Raymond E DEWALT, Timeline [online] At: http://www.dewalt.co.uk/the-brand/Brand-history.html
3. De Walt, 2016. Construction, Key costumers [online] At: http://www.dewalt.co.uk/the-brand/Construction.html
4. De Walt, 2016. Brand's Safety. [online] At: http://www.dewalt.co.uk/the-brand/Extreme-testing.html
5. Stanley Black and Decker, 2016. Corporate group. [online] At: http://www.stanleyblackanddecker.com/about/who-we-are
6. Google Trends, 2016. Drill Attachment. [online] At: https://www.google.com/trends/explore?date=today%2012-m&q=Drill%20Attachment
7. Google Trends, 2016. De Walt drill. [online] At: https://www.google.com/trends/explore?q=De%20Walt%20drill
8. UK Essays. November 2013. Porters Five Forces Model Of Competitive Advantage Business Essay. [online]. At: https://www.ukessays.com/essays/business/porters-five-forces-model-of-competitive-advantage-business-essay.php?cref=1 [Accessed on 29 November 2016].
9. Makita UK, 2016. Anti-Vibration Technology: AVT. [online] At: http://www.makitauk.com/anti-vibration-technology.html
10. Malco Products Inc., 2016. Products. [online] At: http://malcoproducts.com/#
11. Stuart, 2015. New De Walt Shear Attachment Works with Your Drill or Impact Driver. Tool Guyd [online] At: http://toolguyd.com/dewalt-shear-attachment-for-drill-impact-driver/
12. Fred, 2015. Comments feedback. New De Walt Shear Attachment Works with Your Drill or Impact Driver. Tool Guyd [online] At: http://toolguyd.com/dewalt-shear-attachment-for-drill-impact-driver/
13. SKF, 2016. About SKF. [online] At: http://www.skf.com/uk/our-company/index.html
14. SKF, 2016. Filament wound Bushes. [online] At: http://www.skf.com/uk/products/bearings-units-housings/plain-bearings/bushings-thrust-washers-strips/index.html?WT.oss=bushings&WT.z_oss_boost=0&WT.z_oss_ref=Products&tabname=Products&WT.z_oss_rank=1&WT.z_oss_filter=Bearings, units and housings
15. SKF, 2016. Bearing 1. 6001. [online] At: http://www.skf.com/uk/products/bearings-units-housings/ball-bearings/deep-groove-ball-bearings/single-row-deep-groove-ball-bearings/single-row/index.html?designation=6001&unit=metricUnit
16. SKF, 2016. Bearing 2. 6001–RSL [online] At: http://www.skf.com/uk/products/bearings-units-housings/ball-bearings/deep-groove-ball-bearings/single-row-deep-groove-ball-bearings/single-row/index.html?designation=6001-RSL&unit=metricUnit

REFERENCES

17. SKF, 2016. Y-bearing with eccentric locking collar.[online]] At: http://www.skf.com/uk/products/bearings-units-housings/ball-bearings/y-bearings/designs-and-variants/y-bearings-with-an-eccentric-locking-collar/index.html
18. Mastercut UK, 2016. Guillotine Shear Blades. [online] At: http://www.mastercut.co.uk/guillotine-shear-blades_P2.html
19. MPW Staff, 2010. Plastics Today. Move over, magnesium, as PBT is used for drill housing [online] At: http://www.plasticstoday.com/content/move-over-magnesium-pbt-used-drill-housing/63589384914598
20. BASF, 2001. First plastic gear housing for the DeWALT hammer drill. **Replacing metal in professional power drills. [online] At:** http://worldaccount.basf.com/wa/plasticsAP~en_GB/portal/show/common/plasticsportal_news/2010/10_374
21. **De Walt, DC988 User Manual. [PDF] At: http://service.dewalt.co.uk/PDMSDocuments/EU/Docs//docpdf/dc980,%2081,%2084,%2087,%2088_t10,%2011,%2012_uk_md09.pdf**
22. **Health and Safety Executive, 2007. Correlation between vibration emission and vibration during real use. *Nibblers and shears.* [PDF] At: http://www.hse.gov.uk/research/rrpdf/rr576.pdf**
23. **Khan, 2016.** 9 Strategies for Profitably Pricing Your Retail Products. [online] At: https://www.shopify.com/retail/120028547-9-strategies-for-profitably-pricing-your-retail-products
24. **Mechanical Design, 2016.** Beam Formulae. [PDF] At: http://www.linsgroup.com/MECHANICAL_DESIGN/Beam/beam_formula.htm

Appendix

Project Plan:

Project Planner - i7437036 DE2B

ACTIVITY	PLAN START	PLAN DURATION	ACTUAL START	ACTUAL DURATION	PERCENT COMPLETE
Market Research (Position in the market, customer's expectations, design cues, etc)	1	1	1	1	100%
Needs Analysis	1	2	1	1	100%
PDS	2	1	2	6	100%
Concept Generation and Selection	3	1 1/2	1	2	100%
Tech Analysis (Product life battery, ergonomics, line-of-action effectiveness, speed, power)	4	1	3	4	99%
Final Design with ALL details included	5	1	3	5	100%
Conclusion	6	1	4	7	100%
Report + Proof read + Re-writes	7	1	7	8	100%
Viva	8		N/A		%
Engineering Drawings	9		N/A		%

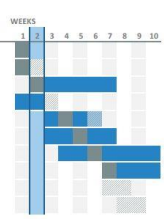

Period Highlight: 2

Plan | Actual | % Complete | Actual (beyond plan) | % Complete (beyond plan)

Technical Analysis:

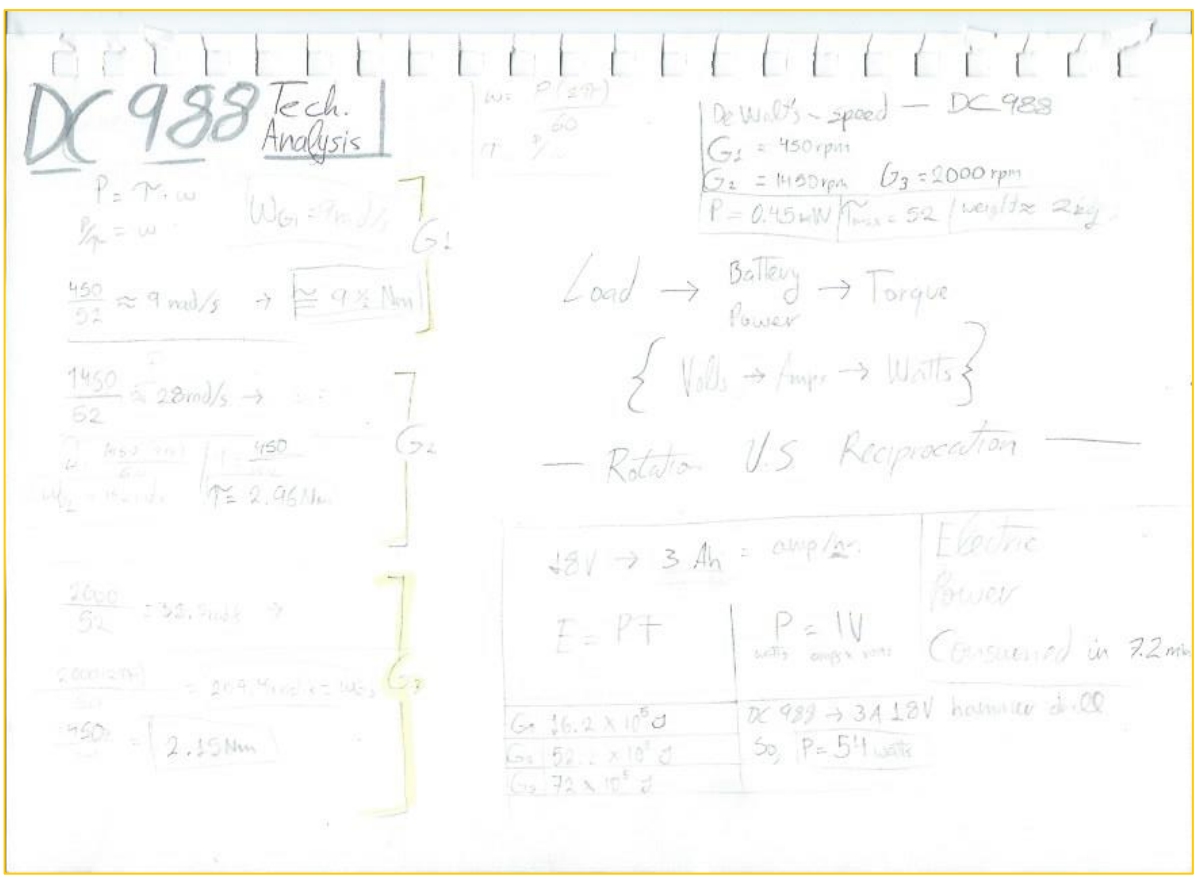

APPENDIX

Calculations:

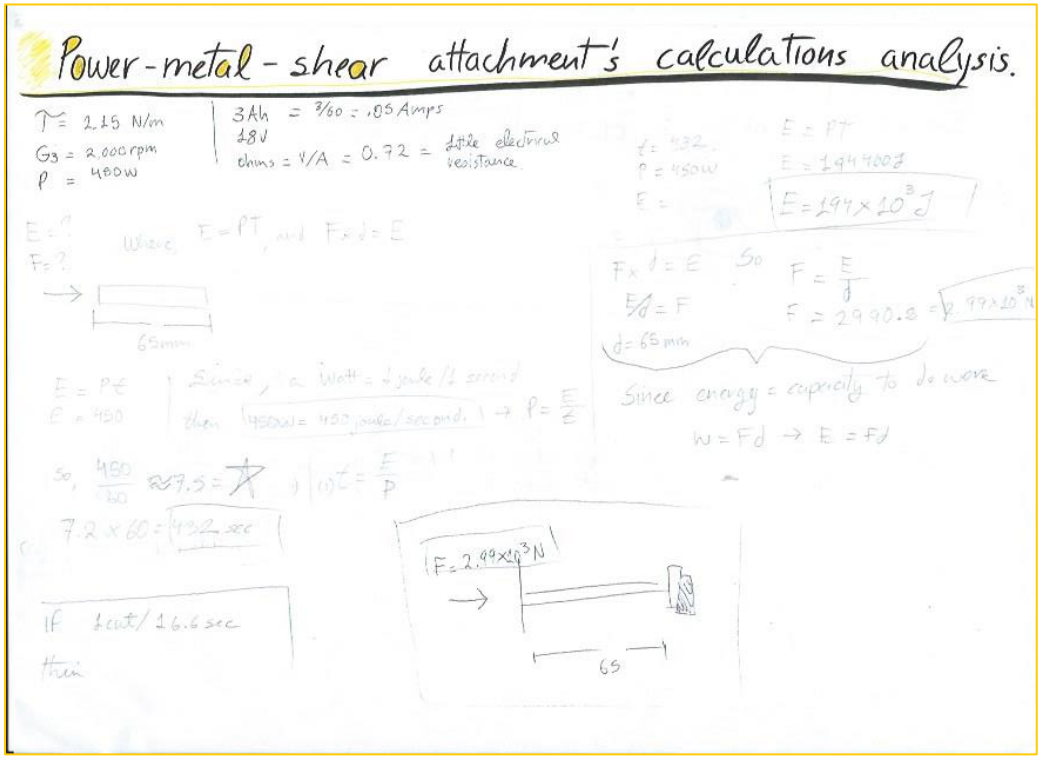

APPENDIX

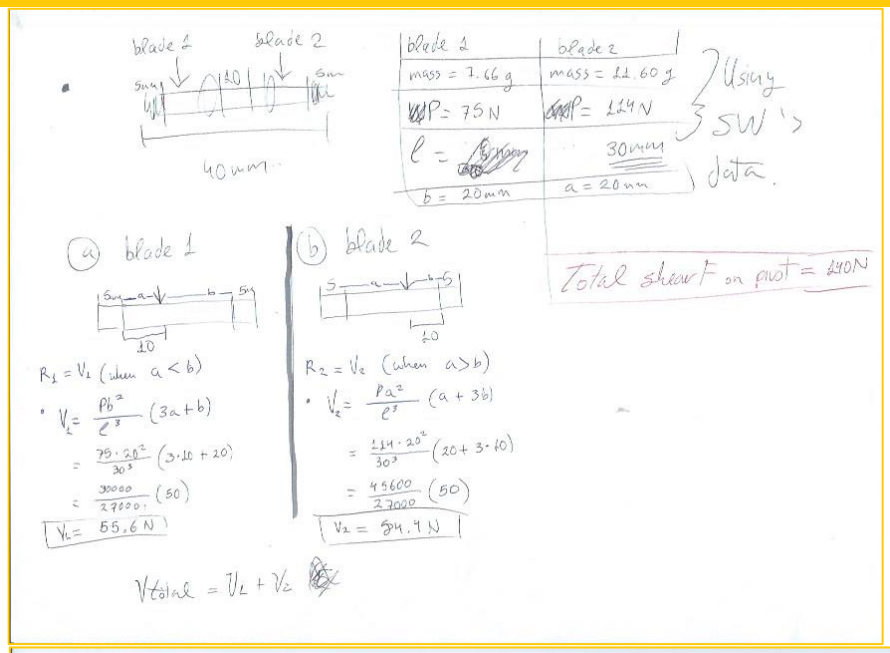
blade 1
blade 2
5mm
10
5mm
40mm
blade 1
mass = 7.66 g
P = 75 N
l = 30mm
b = 20mm
blade 2
mass = 11.60 g
P = 114 N
a = 20mm
Using SW's data.
Total shear F on pivot = 140N
(a) blade 1
5mm a b 5mm
10
R1 = V1 (when a < b)
V1 = Pb²/l³ (3a+b)
= 75·20²/30³ (3·10 + 20)
= 30000/27000 (50)
V1 = 55.6 N
(b) blade 2
5 a b 5
10
R2 = V2 (when a > b)
V2 = Pa²/l³ (a + 3b)
= 114·20²/30³ (20 + 3·10)
= 45600/27000 (50)
V2 = 84.4 N
Vtotal = V1 + V2

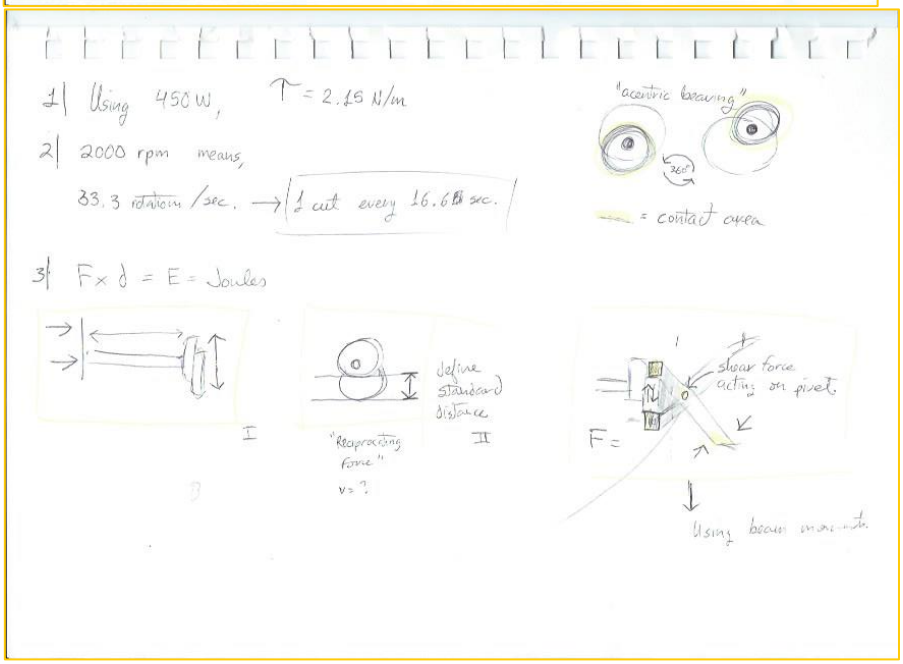
1| Using 450 W,
τ = 2.15 N/m
2| 2000 rpm means,
33.3 rotation /sec. → 1 cut every 16.6 sec.
"acentric bearing"
360°
= contact area
3| F × d = E = Joules
I
define standard distance
"Reciprocating force"
v = ?
II
shear force acting on pivot
F =
Using beam mechanics

APPENDIX

Tri-axial vectors:

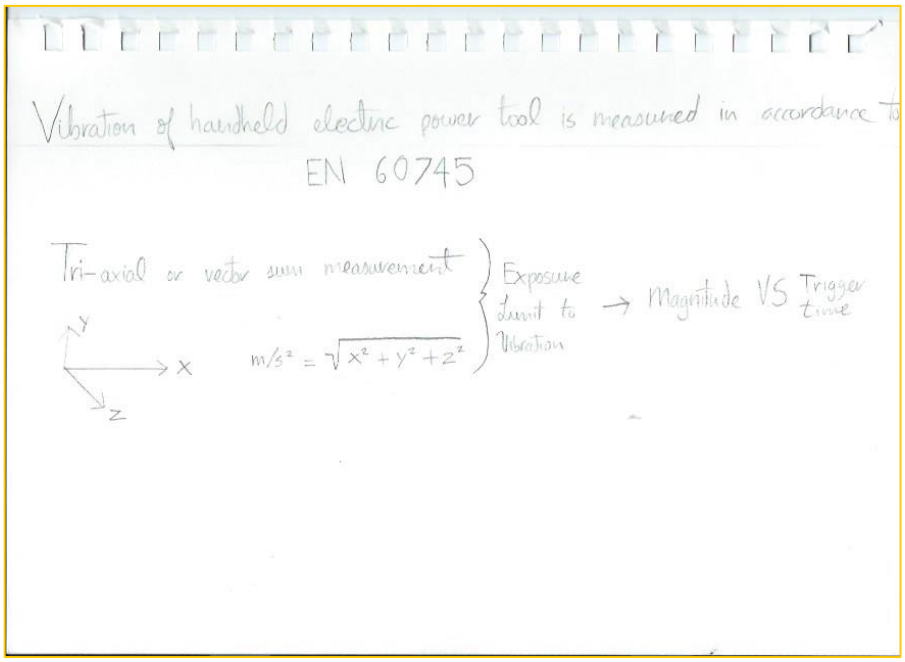

SolidWorks Model (additional views):